HM8501

ECN # or INIT	REV	DESCRIPTION	DATE
	A	RELEASED	07-FEB-2008
OE-001	A1	CORRECTED NOTES, VIEWS, ETC.	04-JUN-2012
OE-001	A2	CORRECTED MARKING	07-MAR-2013
OE-001	A3	CLERICAL ERROR	16-MAY-2013

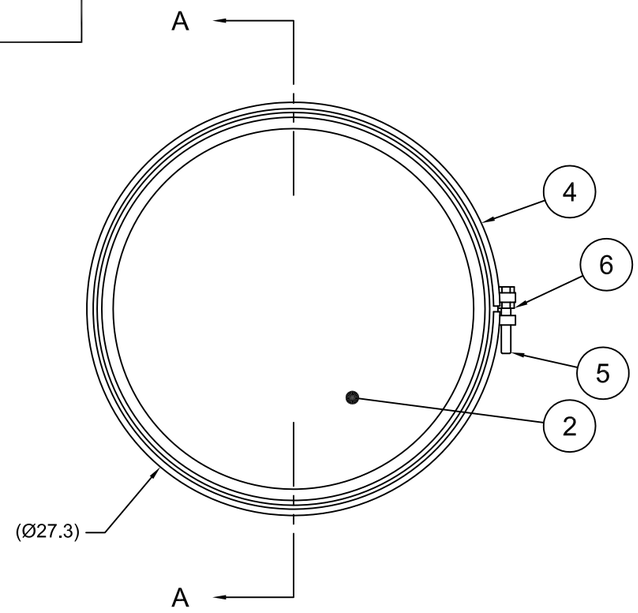

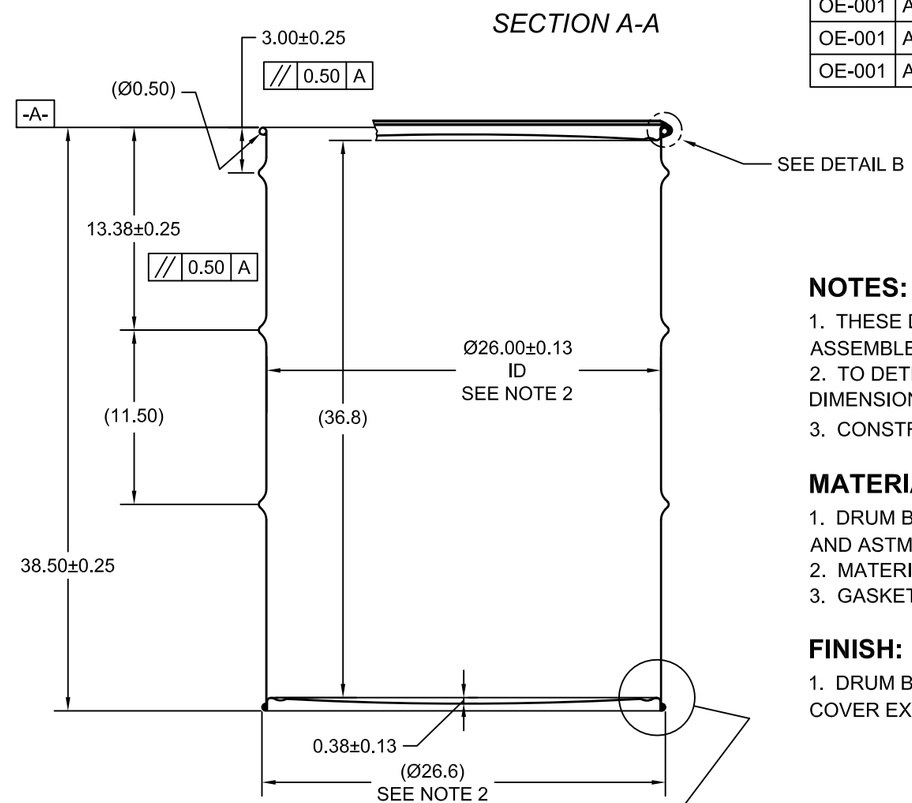

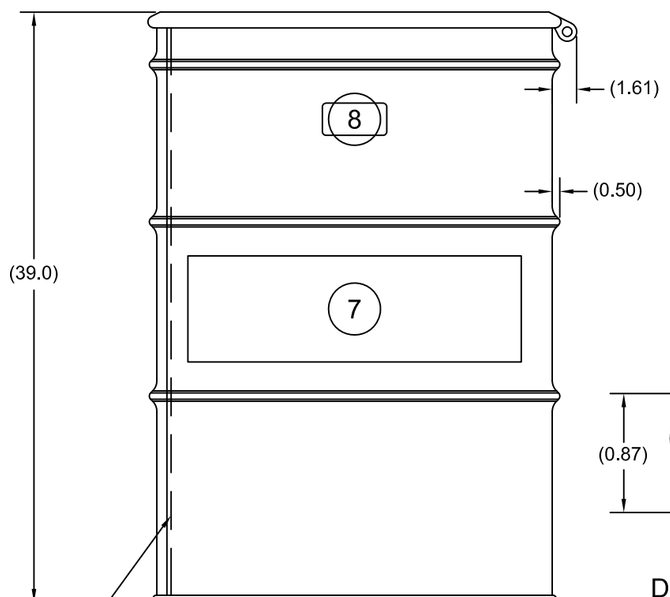

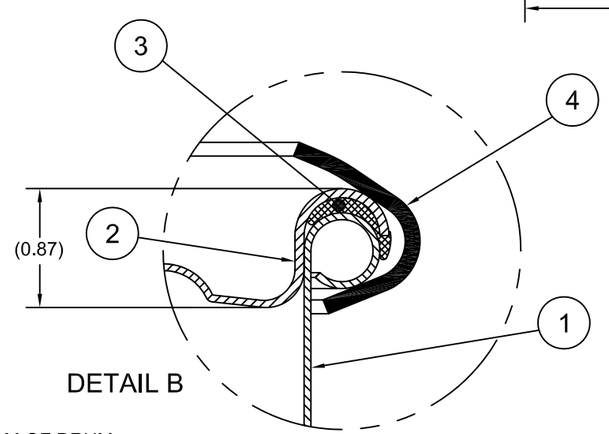

DETAIL B

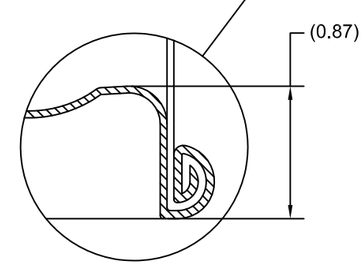

ROUND SEAM
(APPROXIMATELY)

NOTES:

1. THESE DIMENSIONS REPRESENT DRUM AFTER BEING PROPERLY ASSEMBLED AND CLOSED PER SKOLNIK CLOSING INSTRUCTIONS
2. TO DETERMINE GREATER ACCURACY OF ANY DIAMETRIC DIMENSION, MEASURING OF CIRCUMFERENCE IS REQUIRED
3. CONSTRUCTION per 49 CFR §178.504 (b)

MATERIAL:

1. DRUM BODY AND COVER CRCQ CARBON STEEL PER ASTM A1008 AND ASTM A568 OR OR EQUIVALENT
2. MATERIAL THICKNESS 1.5mm (0.0543 - 0.0590; 16 GAUGE).
3. GASKET MAT'L PER ASTM D1056.

FINISH:

1. DRUM BODY EXTERIOR PAINTED YELLOW (LQ10024)
COVER EXTERIOR PAINTED RED (LQ10017)

ITEM	P/N	DESCRIPTION	QTY
8		UN DURABLE LABEL	1
7	LS0500	LOGO MULTI-LINGUAL SALVAGE DRUM	1
6	NT5800	5/8-11UNC HEX JAM NIT	1
5	BT5840	5/8-11UNC X 4in LONG HEX HEAD BOLT	1
4	RBH2612	BOLT RING (HP) 79-96G 12 GA 5/8 LUG	1
3	GE8500	GASKET EPDM IN-COVER D	1
2	P2615	COVER Ø26 ID CRCQ STEEL	1
1		BODY/BOTTOM 85 GALLON DRUM Ø26 ID	1

OVERLAP WELD

UN NUMBER EMBOSSED ON BOTTOM OF DRUM
½" CHARACTERS READING:
UN/1A2/X440/S/YR
UN/1A2T/Y320/S/YR
1.5 *

(YR = YEAR OF MANUFACTURE)

TARE WEIGHT:
82 lbs

BEST PRINTED ON B-SIZE PAPER

THE USE OF INFORMATION CONTAINED HEREIN IS RESTRICTED FOR THE BENEFIT OF SKOLNIK INDUSTRIES ONLY, UNAUTHORIZED USE OR DISCLOSURE, COPYING OR OTHERWISE REPRODUCING (IN ANY MANNER) ANY PORTION OF THIS DRAWING WITHOUT PRIOR WRITTEN PERMISSION OF AN AUTHORIZED OFFICIAL OF SKOLNIK INDUSTRIES IS STRICTLY PROHIBITED.

MFG: JR
DRW: LJT
CHK: DR
SLS: DR
QA: MD
APR: Jesse Sanchez
FILE CREATED IN: AutoCAD 2002

UNLESS STATED OTHERWISE
(DIMENSIONS IN PARENTHESIS ARE FOR REFERENCE ONLY!!!)
ALL DIMENSIONS ARE IN INCHES
DO NOT SCALE DRAWING
TOLERANCES:
FRACTIONS ±1/4
X° ± 3°
X.X ± 0.2
X.XX ± 0.10
X.XXX ± 0.030
3RD

SKOLNIK INDUSTRIES, INC.
4900 SOUTH KILBOURN AVENUE, CHICAGO, IL 60632

DESCRIPTION
85 GALLON OPEN HEAD DRUM
1.5 - 1.5 - 1.5 CRCQ
1A2/X440/S & 1A2T/Y320/S

REL. DATE: 07-FEB-2008
PART NUM. / FILENAME: HM8501
REV: A3