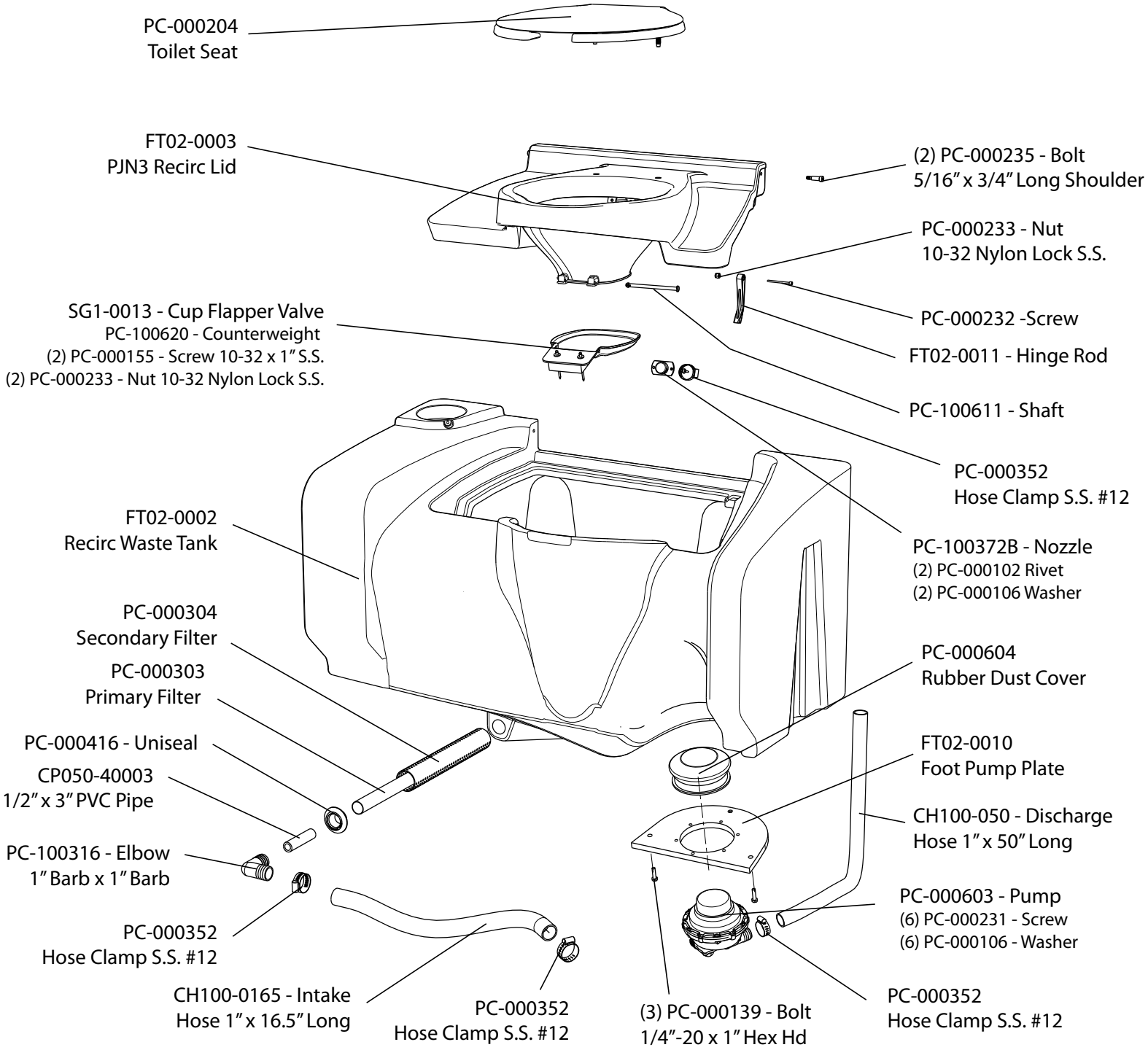
PC-000204
Toilet Seat
FT02-0003
PJN3 Recirc Lid
(2) PC-000235 - Bolt
5/16" x 3/4" Long Shoulder
PC-000233 - Nut
10-32 Nylon Lock S.S.
PC-000232 -Screw
FT02-0011 - Hinge Rod
PC-100611 - Shaft
PC-000352
Hose Clamp S.S. #12
PC-100372B - Nozzle
(2) PC-000102 Rivet
(2) PC-000106 Washer
SG1-0013 - Cup Flapper Valve
PC-100620 - Counterweight
(2) PC-000155 - Screw 10-32 x 1" S.S.
(2) PC-000233 - Nut 10-32 Nylon Lock S.S.
FT02-0002
Recirc Waste Tank
PC-000304
Secondary Filter
PC-000303
Primary Filter
PC-000416 - Uniseal
CP050-40003
1/2" x 3" PVC Pipe
PC-100316 - Elbow
1" Barb x 1" Barb
PC-000352
Hose Clamp S.S. #12
CH100-0165 - Intake
Hose 1" x 16.5" Long
PC-000352
Hose Clamp S.S. #12
(3) PC-000139 - Bolt
1/4"-20 x 1" Hex Hd
PC-000604
Rubber Dust Cover
FT02-0010
Foot Pump Plate
CH100-050 - Discharge
Hose 1" x 50" Long
PC-000603 - Pump
(6) PC-000231 - Screw
(6) PC-000106 - Washer
PC-000352
Hose Clamp S.S. #12