FS3-2000 Recirculating Tank Exploded View

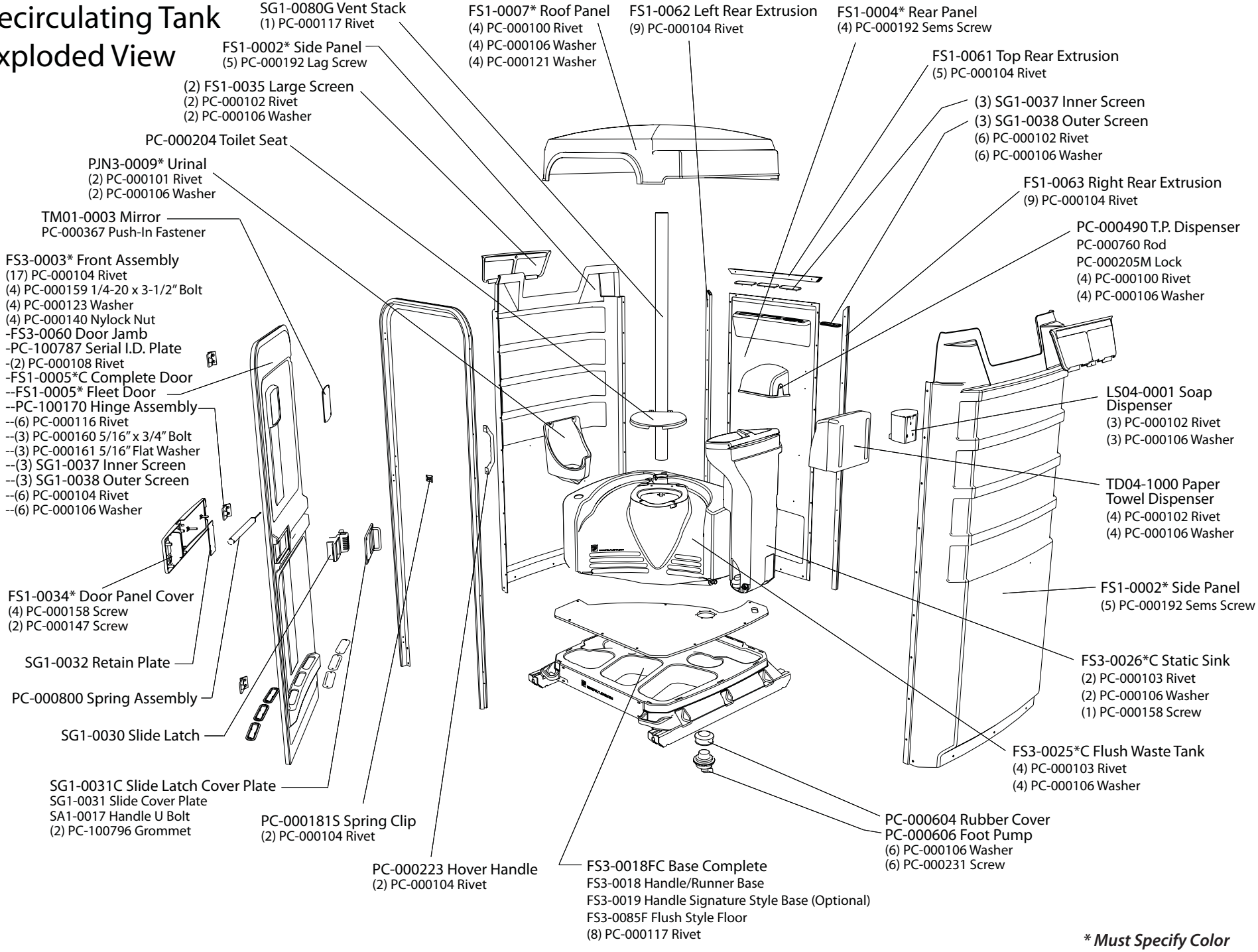

**** Must Specify Color***

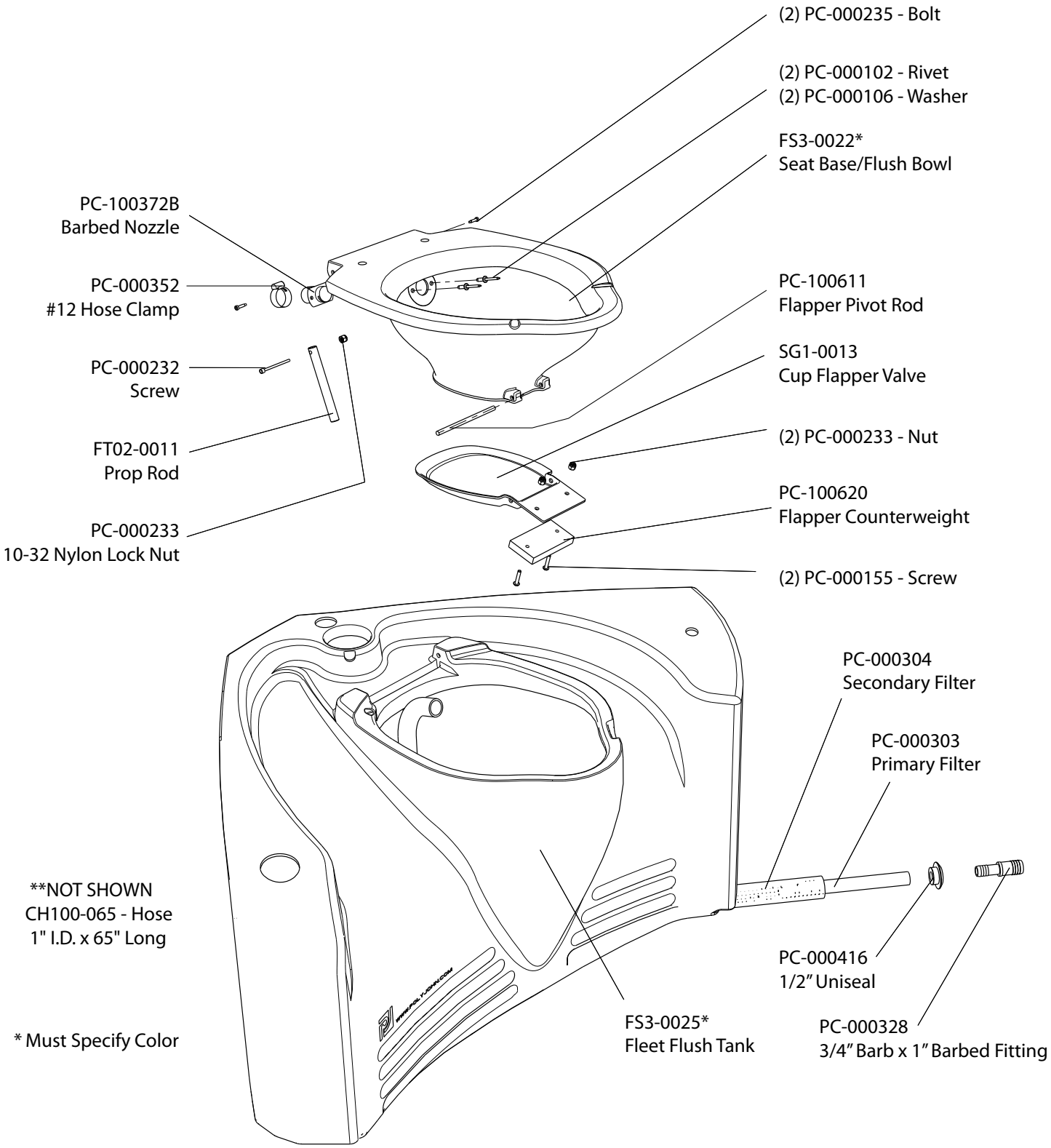

FS3-0025C Parts Listing

FS3-0026C - Fleet Sink
Non-Flushing Model

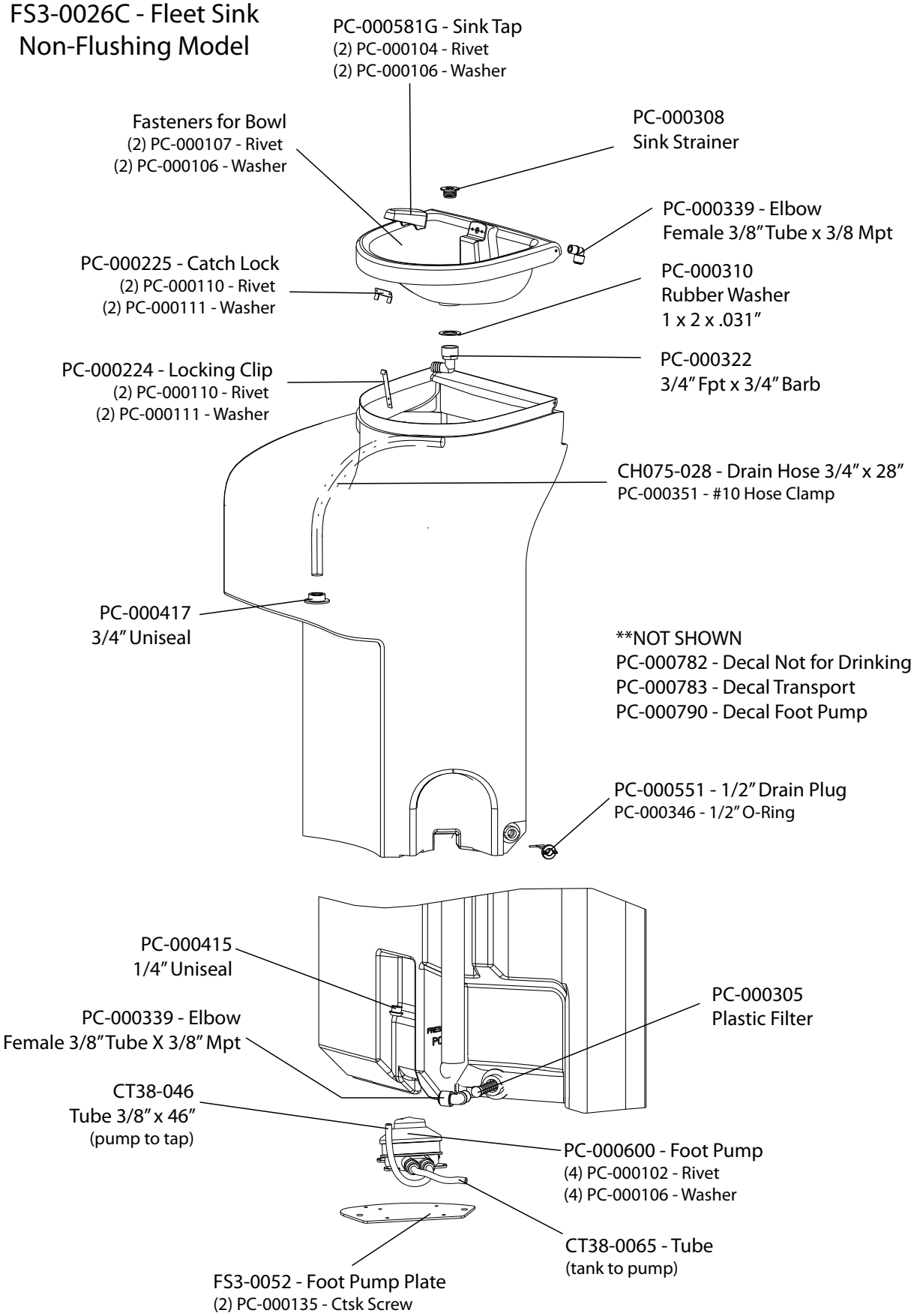

Updated 10-31-12