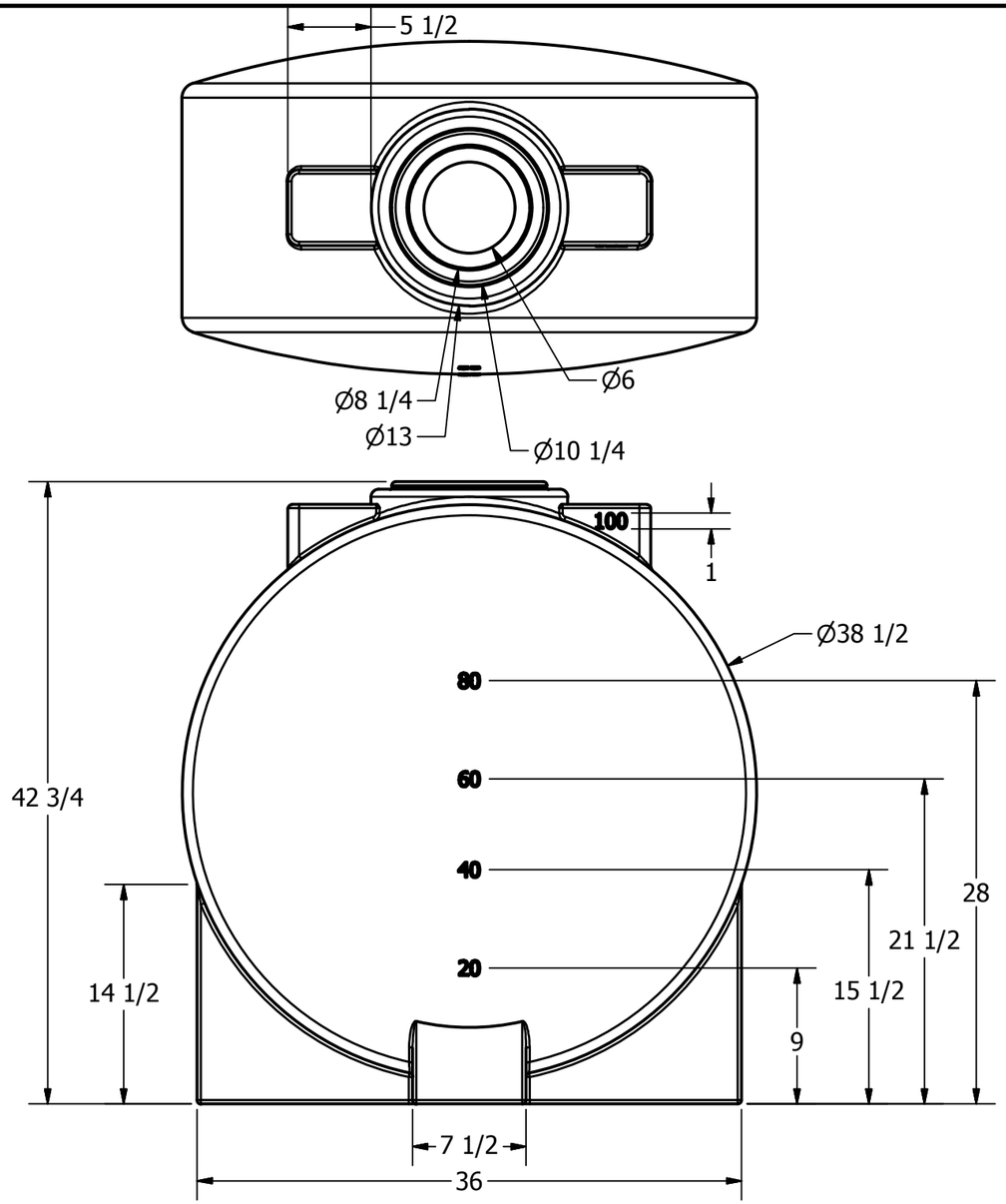

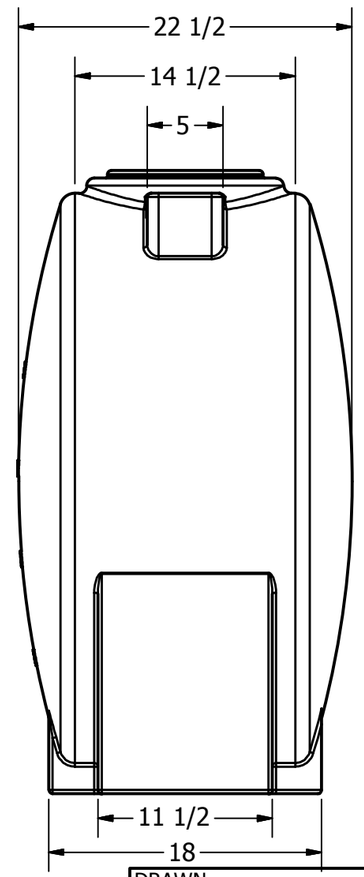

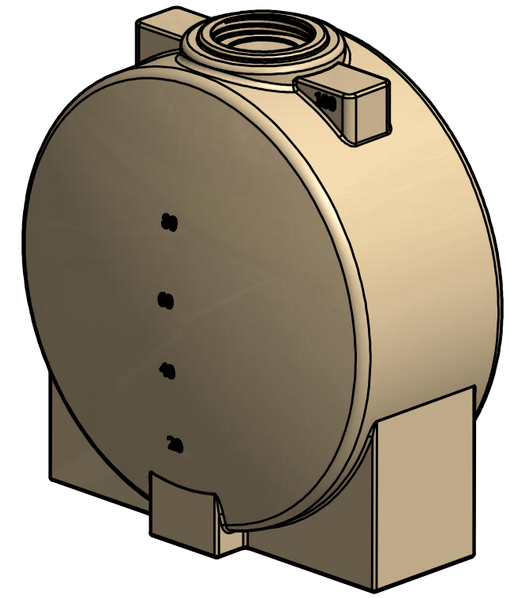

DRAWN Liv Oltean	7-13-2016	NORWESCO, INC. SAINT BONIFACIUS, MN
CHECKED		TITLE
QA		100 GALLON FREE STANDING SLENDER TANK
MFG		
APPROVED		
		SIZE B / DWG NO 44800 / REV A
		SCALE: 1/16 / SHEET 1 OF 1