NOZZLE SCHEDULE							
ITEM	SIZE	RATING	TYPE	MATL.	PROJ. IN	PROJ. OUT	REMARKS
A	6"	N.P.T.	H.CPL.	C.S.	STD.	STD.	PRIMARY EMERGENCY VENT OPENING
B	6"	N.P.T.	H.CPL.	C.S.	STD.	STD.	SECONDARY EMERGENCY VENT OPENING
C	2"	N.P.T.	W.F.	C.S.	STD.	STD.	

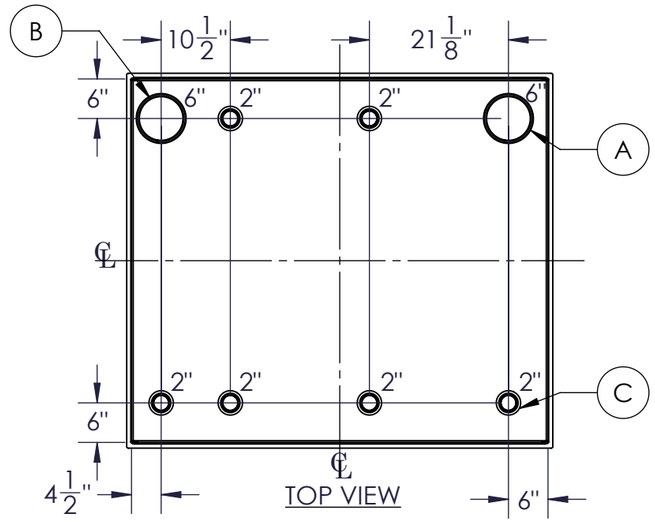

TOP VIEW

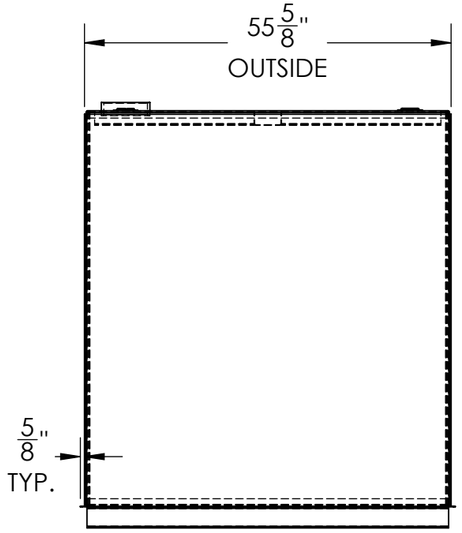

LEFT SIDE

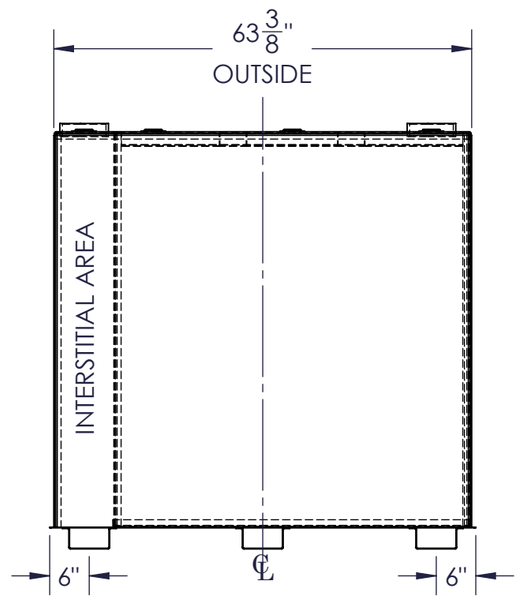

FRONT VIEW

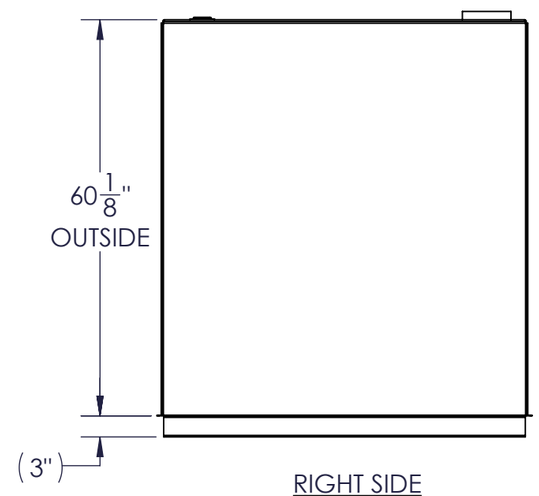

RIGHT SIDE

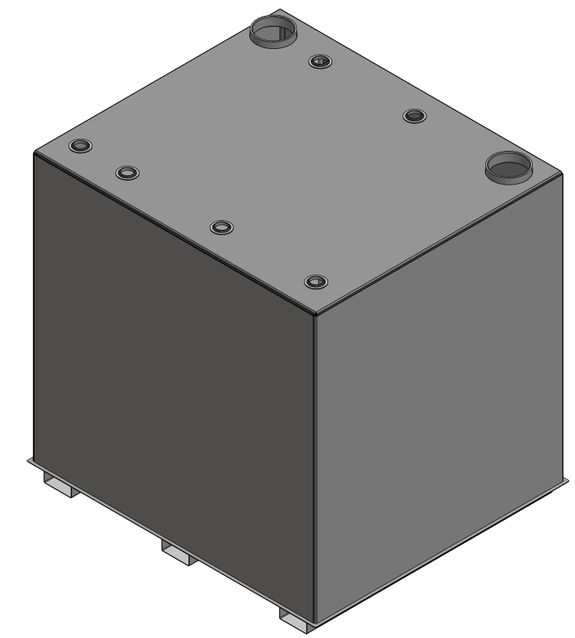

NOTES:
A. MATERIAL: H.R. CARBON STEEL
B. DESIGN & OPERATING PRESSURE: ATMOSPHERIC.
C. DESIGN & OPERATING TEMPERATURE: AMBIENT.
D. TANK TO BE BUILT & LABELED PER U.L. SPEC. #142.
E. TANK TO BEAR MANUFACTURERS & U.L. LABELS ONLY.
F. TANK TO BE AIR TESTED WITH WATER & SOAP SUDS SOLUTION.
G. INTERIOR: REMOVE WELD SLAG (SHIP CLEAN & DRY).
H. EXTERIOR: GRAY PRIMER INCLUDED; SEE SALES ORDER FOR TOP COAT.
I. ALL FITTINGS TO BE PROTECTED FOR SHIPMENT.
J. CUSTOMER HAS THE RESPONSIBILITY TO VERIFY ALL DIMENSIONS.

APPROVAL FOR CONSTRUCTION
SCHEDULE A - MASTER TERMS & CONDITION OF SALE*

☐ APPROVED AS DRAWN.

☐ APPROVED WITH NOTED CHANGES. CONSTRUCTION WILL BE SCHEDULED WHEN SIGNED DRAWING AND CONFIRMED ORDER ARE RECEIVED.

SIGNATURE:_____

DATE:_____

*All pages of this Schedule A are incorporated by reference and are a part of the additional terms of the Master Terms & Conditions of Sale. www.newberrytanks.com/masterterms.pdf

SALES ORDER: -

WEIGHT (LBS):**1398**

Newberry Tanks
New Thinking

All units inches unless stated otherwise

Phone: 870-735-4473

DESCRIPTION:
750 GALLON RECTANGULAR UL 142 DOUBLE WALL TANK

CUSTOMER:			P.O.#
DATE: 3/7/2023	SCALE:	DWG.# FTDBSW-0750	DRAWN BY: AJC CHKD BY:

Newberry Tanks & Equipment, LLC 205 North Walker West Memphis, AR. 72301 870-735-4473 www.newberrytanks.com

This drawing may contain CONFIDENTIAL information and is intended only for the use of the specific individual(s) to which it is addressed