AT52TT-RT

Tank & Toolbox long bed combo for Roll top bed covers
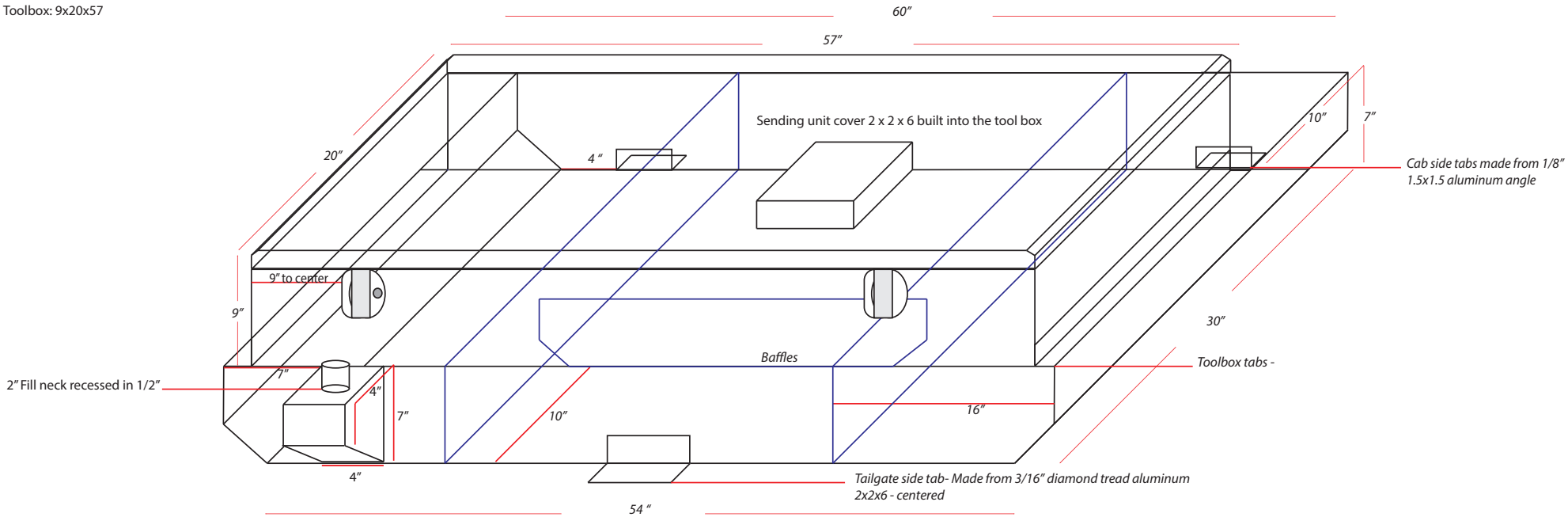
Tank: 7x30x60
Toolbox: 9x20x57